Product Information

Small Beater/Mallet

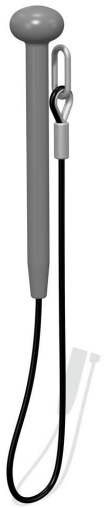

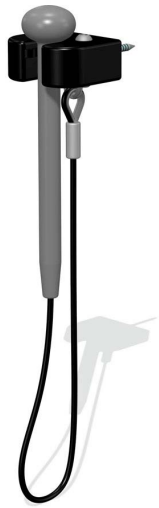

BS EN 1176 - Designed to British & European Standards

Application - Suitable or use with Fahr ϕ38 Tube or 38mm Flat Chimes. If you require a Beater/Mallet for ϕ50mm or ϕ76mm Tube Chimes, we recommend our Large Beater/Mallet

MATERIALS

Beater - Moulded EPDM with Nylon Coated Stainless Steel Core Cable with Stainless Steel Chain Link

Holder - Single Colour High Density Polyethylene (HDPE)

Holder Screw - Stainless Steel ϕ8x80mm Flange Head

Choice of Beaters Available :

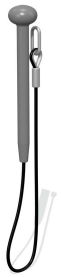

FSU0900

Small Beater/Mallet
& 600mm Cable

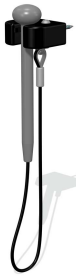

FIECOBEAT

Small Beater/Mallet
& Flat Mount Holder

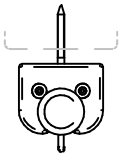

FIECOBEAT120

Small Beater/Mallet
& ϕ120 Mount Holder

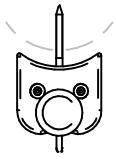

DIMENSIONS

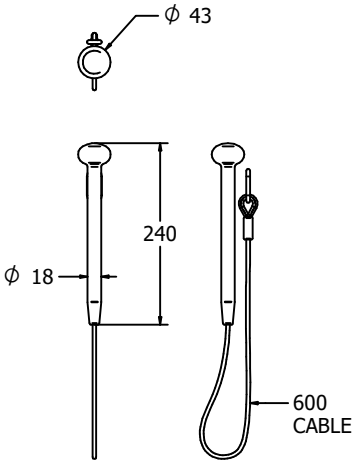

FSU0900

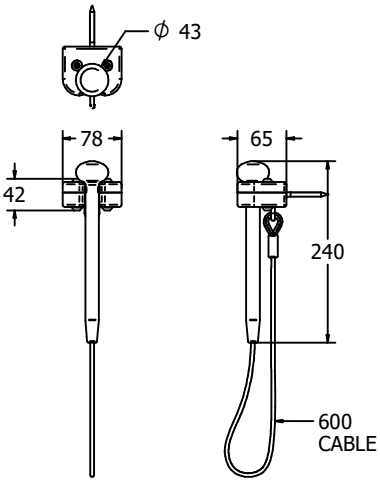

FIECOBEAT

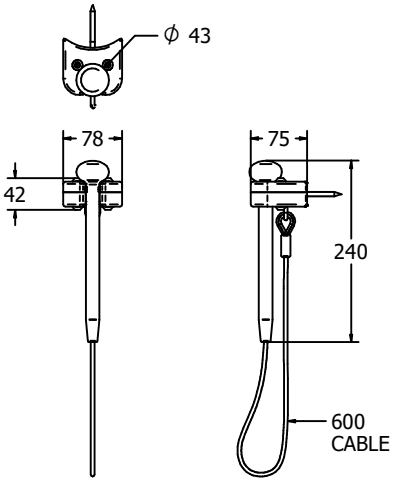

FIECOBEAT120

TECHNICAL

Age Range:	2+ Years
Largest Part:	Small Beater/Mallet - ϕ43 x 840mm
Total Weight:	Beater - 0.15kg Holder - 0.2kg Approx.

IMPORTANT: you must specify the colour option you require at the time of order if it is different from the colour listed/shown above, requirements are subject to availability at the time of order

Fahr Industries Ltd
Spitfire Road, Old Sarum,
Salisbury, Wiltshire, SP4 6GB, UK

© 2020 Fahr Industries Ltd
These designs and content belong to Fahr Industries Ltd and are not to be reproduced in any way or by any means without written persmission

Tel: +44 (0)1722 349793
Fax: +44 (0)1722 349792
Web: www.fahr-industries.com