Product Information

FIMU76TUSTRMNS5 - 76mm Tube Chime - Strap Mounted and Mounting Rail - Silver - Set of 5 - Pentatonic

BS EN 1176 - Designed to British & European Standards

MATERIALS

Mounting Rails - Single Colour High Density Polyethylene (HDPE)

Tube Chimes - Anodised aluminium with a brushed finish

Chimes Straps - Stainless Steel

SUPPLY METHOD

5 Chime Assembly - Assembled

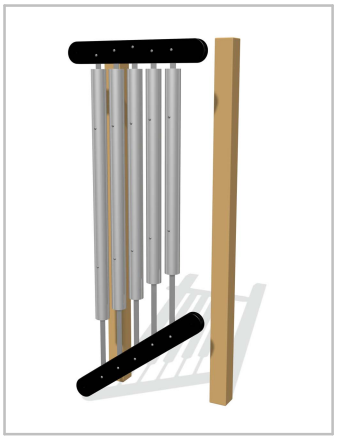

Easily attach to your own posts

Choice of Beaters Available Separately:

FSU0901

Large Beater &
600mm Cable

FIECOBEATLG

Large Beater &
Flat Mount Holder

FIECOBEATLG120

Large Beater &
Φ120 Mount Holder

DIMENSIONS

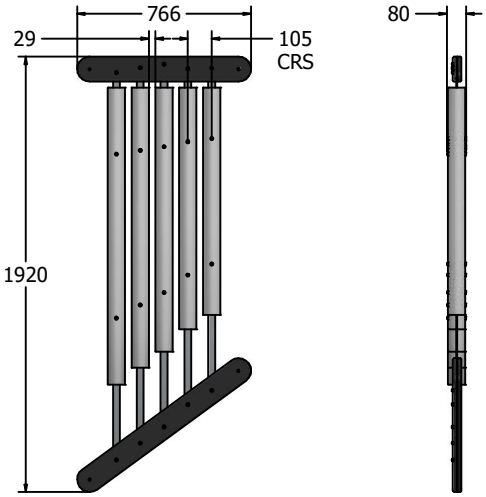

TECHNICAL

Age Range:	2+ Years
Largest Part:	5 Chime Assembly - 1920 x 766 x 80mm
Total Weight:	32kg Approx.
Surfacing :	N/A

IMPORTANT: you must specify the colour option you require at the time of order if it is different from the colour listed/shown above, requirements are subject to availability at the time of order

Fahr Industries Ltd
Spitfire Road, Old Sarum,
Salisbury, Wiltshire, SP4 6GB, UK

© 2020 Fahr Industries Ltd
These designs and content belong to Fahr Industries Ltd and are not to be reproduced in any way or by any means without written persmission

Tel: +44 (0)1722 349793
Fax: +44 (0)1722 349792
Web: www.fahr-industries.com